ST6672 montering

Faceplate for Schucko AD UP 90
Lip width 28 mm

Scale
1:3

ASSA Connect

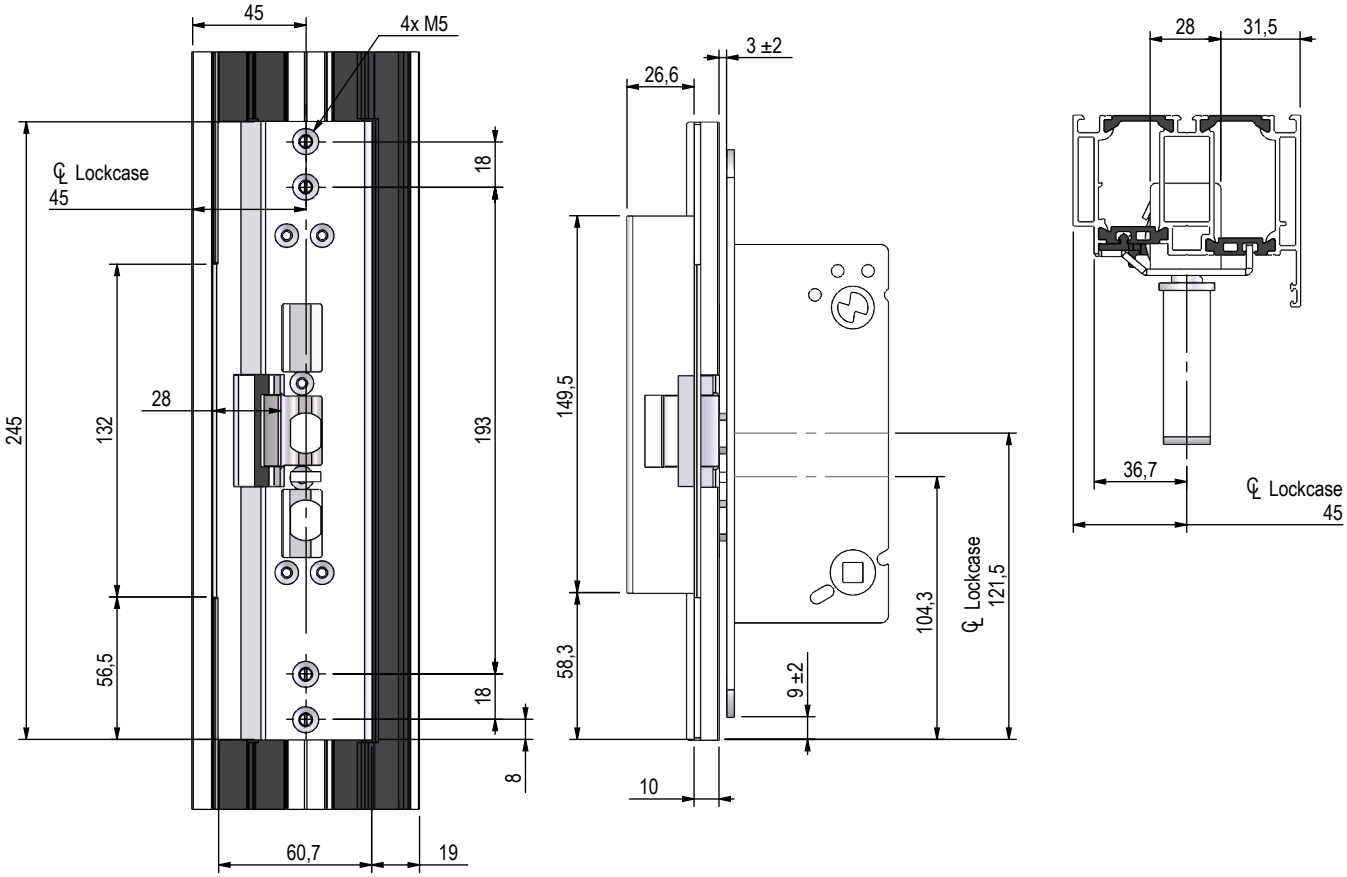

ASSA Modular