ST9628V

Faceplate for Morad AC-77
Lip width 40 mm
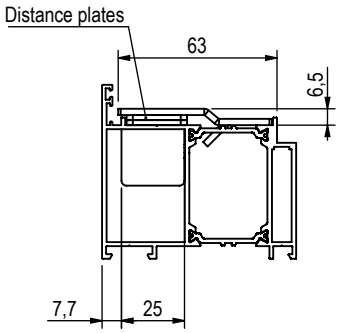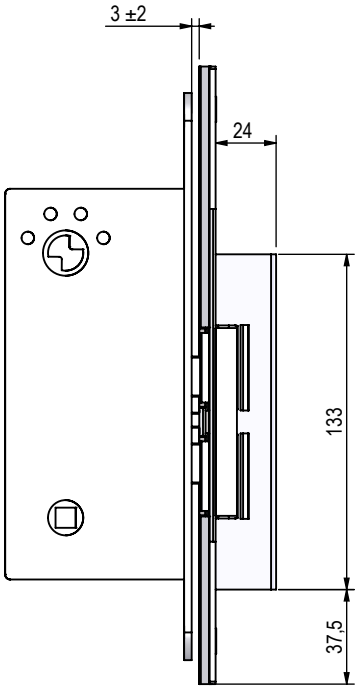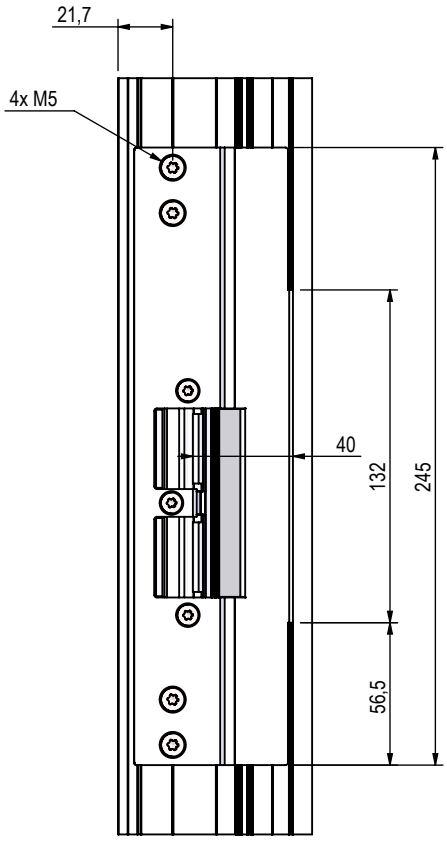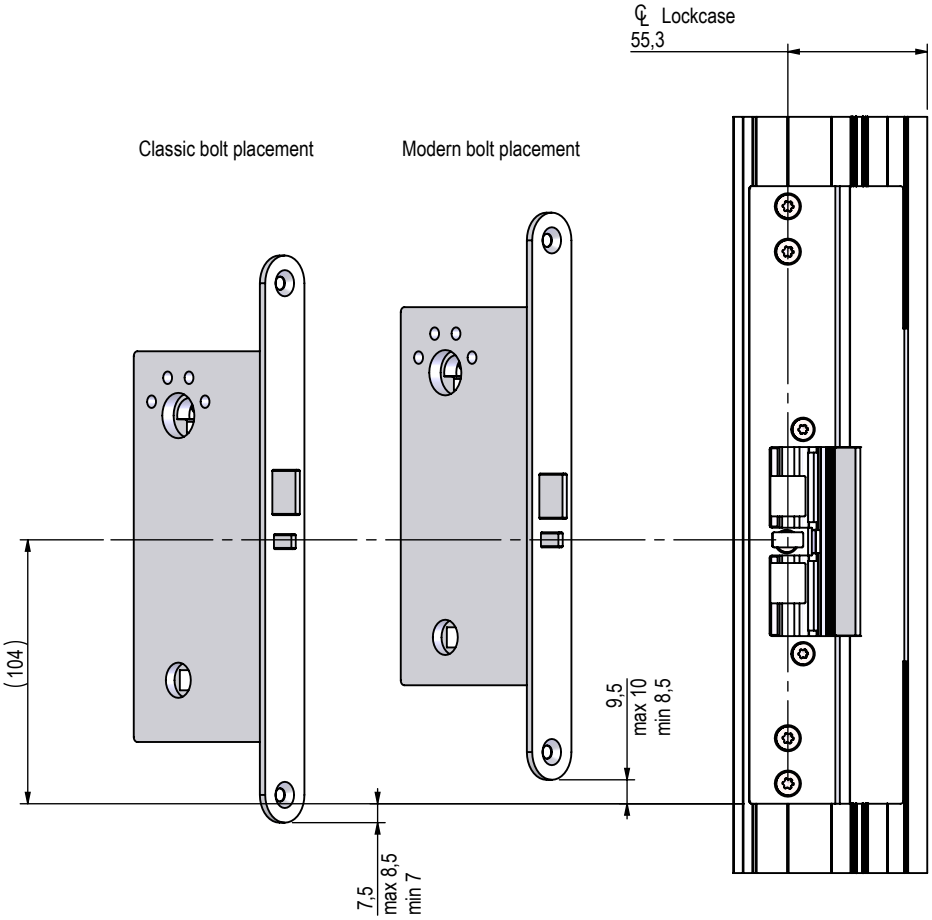
Scale
1:3