ST4864

Angled faceplate 245x40x15
Lip width 15 mm

Scale
1:3

STEP 48 Preload
STEP 98 Preload

ASSA Connect

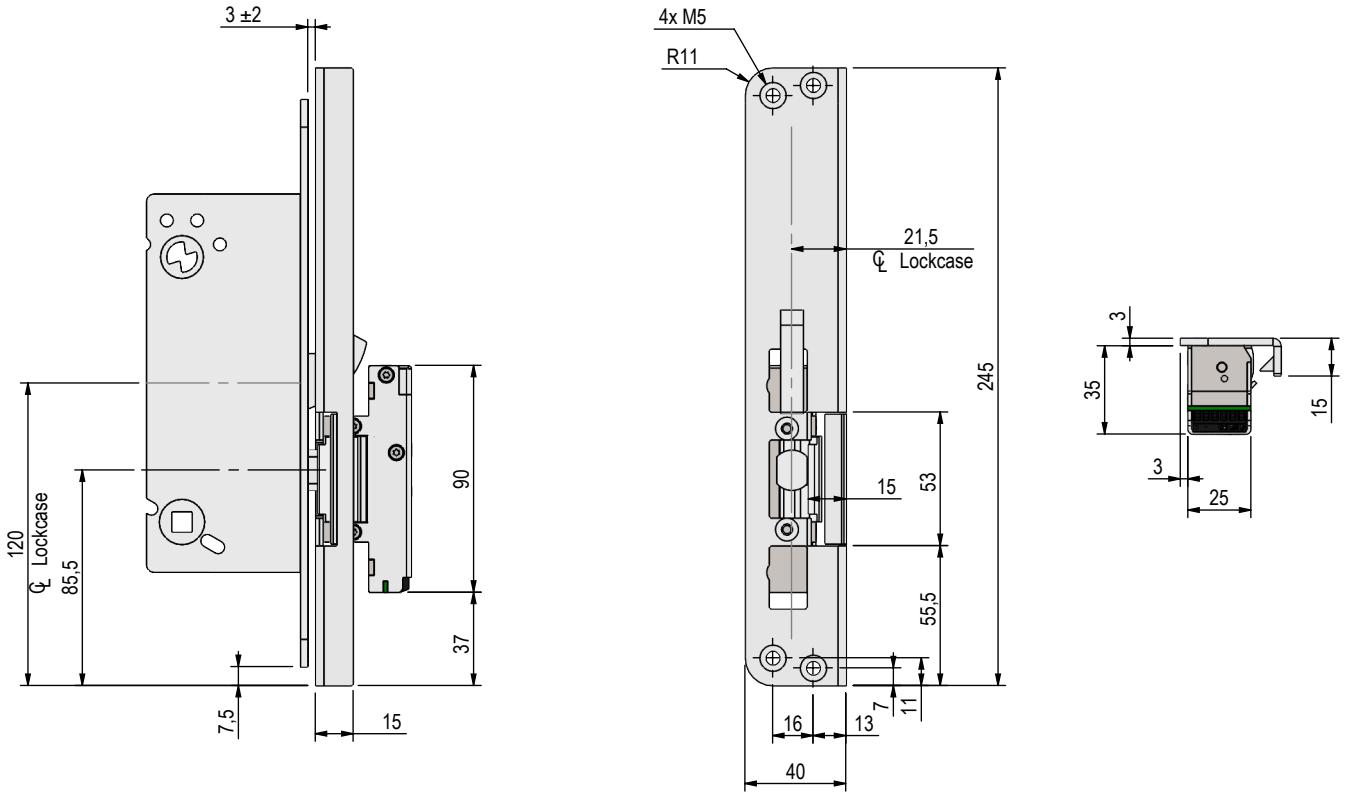

STEP 48 Preload
STEP 98 Preload
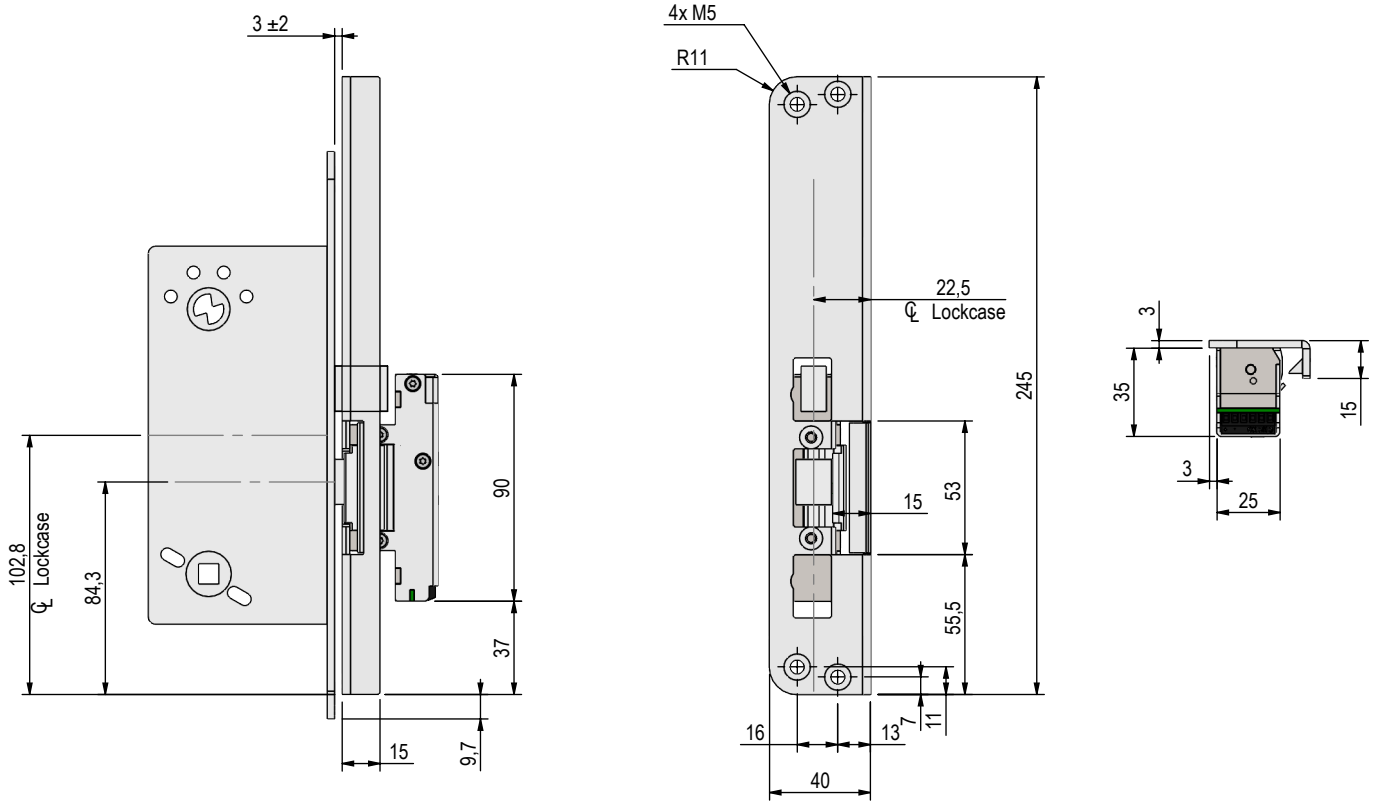
ASSA Modular