ST9642H montering

Faceplate for Reynaers CS77

Lip width 29 mm

Scale 1:3

ASSA Connect

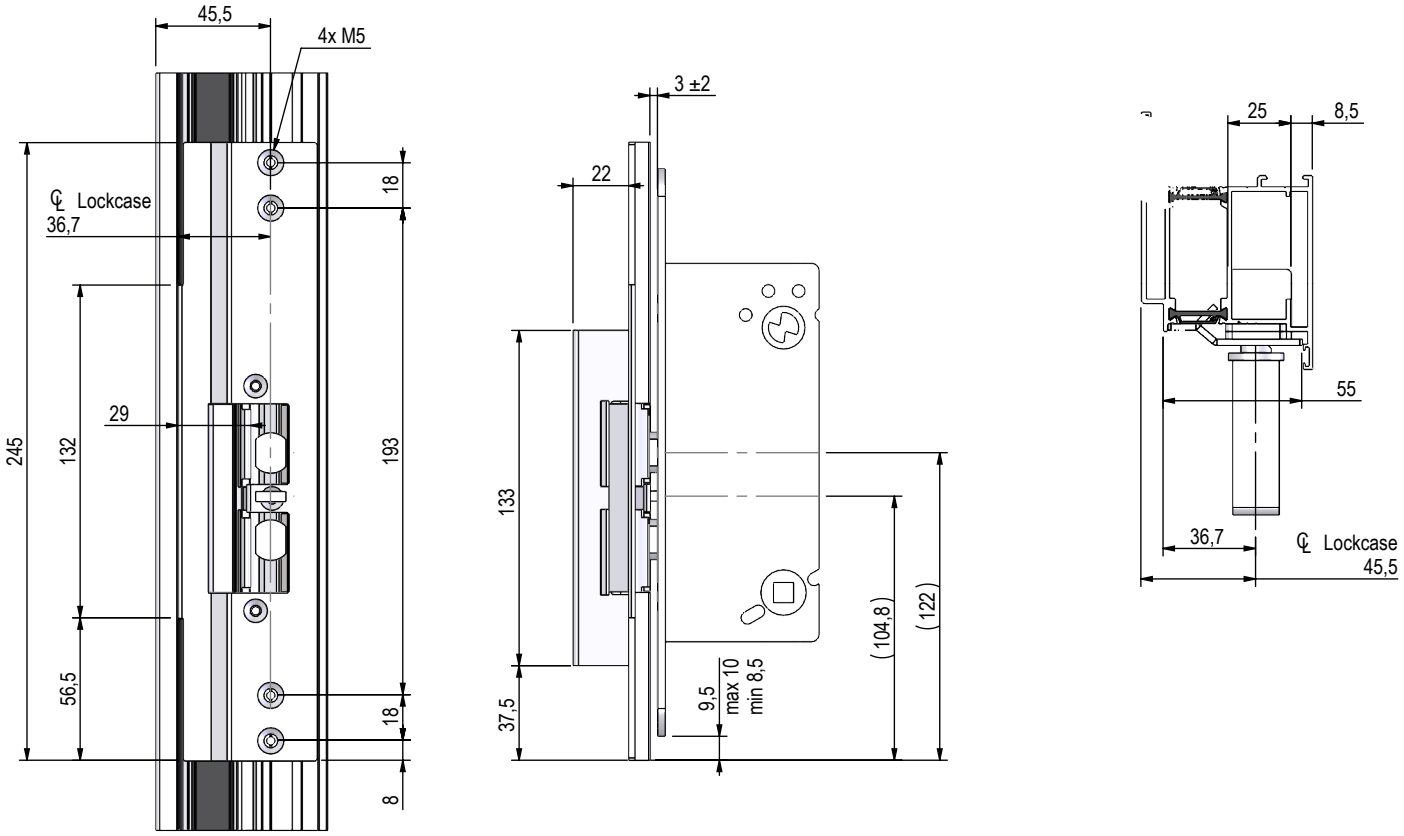
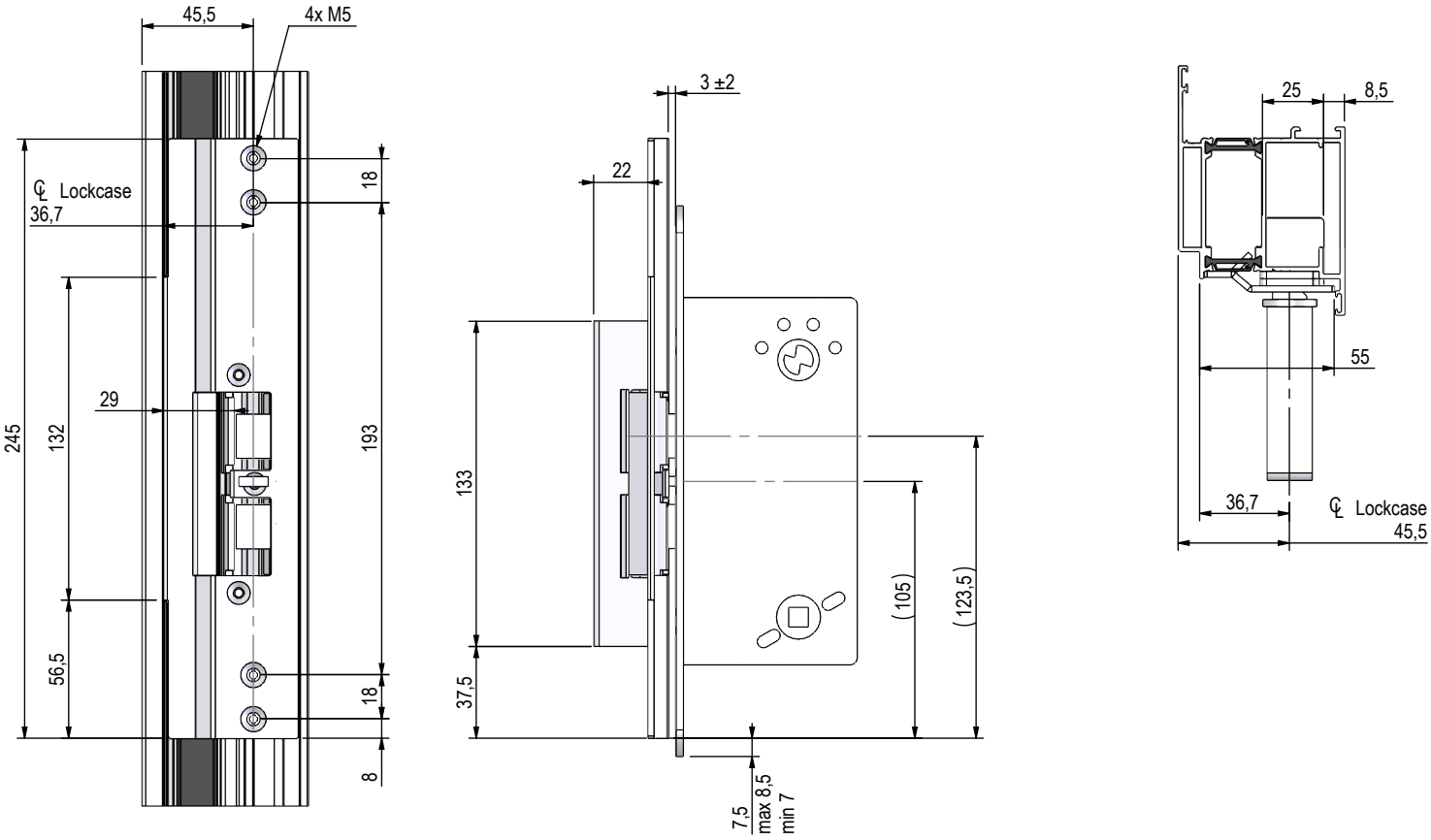
ASSA Modular